design21™

5-in-1 Power Supply



5-in-1 Power Supply

D21PPMA1

Product Overview

Design 21 Power Supply with Potentiometer allows users to adjust output voltage for the setup. Features Triac and dimming options. Works with both single channel LED strip tape and dim-to-warm LED tape. PWM Output allows for a 4k/HZ constant frequency (different frequencies can be customized: 250-20000Hz).

5-in-1 dimming options make this power supply perfect for both residential and commercial LED lighting jobs!

c UL us

RoHS COMPLIANT

Additional Info

Dim-All	Triac / 0-10V / 1-10V / 10VPWM / Potentiometer (PWM Output)
Wattage	300W
Voltage	12V / 24V / 48V
Current	25A / 12.5A / 6.25A
Voltage Tolerance	±0.5V
Voltage Range	110 - 277V, 47-63HZ
Efficiency	91%@120VAC 0.98@277VAC (Total Harmonic Distortion <15%)
AC Current	3.02A (35A Inrush, <0.5mA Leakage)
Protection	Short Circuit / Over Load / Over Temp (100°C±10°C)
Working Temp.	-40 ~ 60
Safety	UL8750, CSAC22.2 No. 250.0-08, IP65
Dimensions	316mm x 120.5mm x 42mm, Aluminum Housing
Other Features	Built-in active PFC / Triac Forward Phase & Reverse Phase, MLV, ELV Dim Range 100-0.1%, Flicker Free, Clamshell Junction Box, Ultra Deep Amplitude

Notes

1. Install in well-ventilated area, vertical mounting is recommended.
2. Use the mounting tabs on the left and right to secure power supply.
3. Try and use dimmers with power at least 1.5 times the output of the driver.

Diagrams

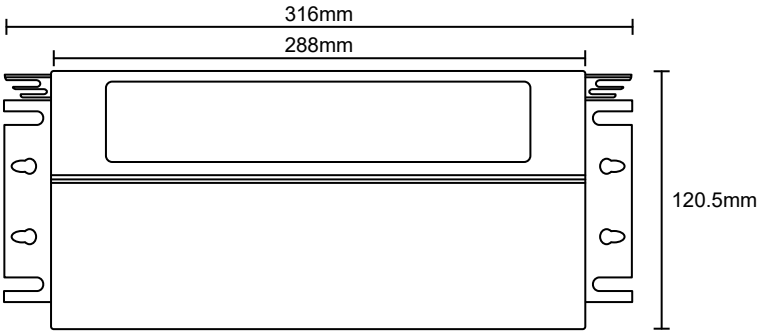

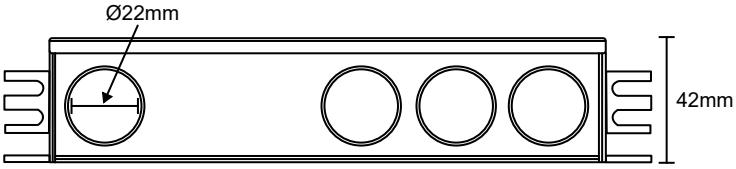

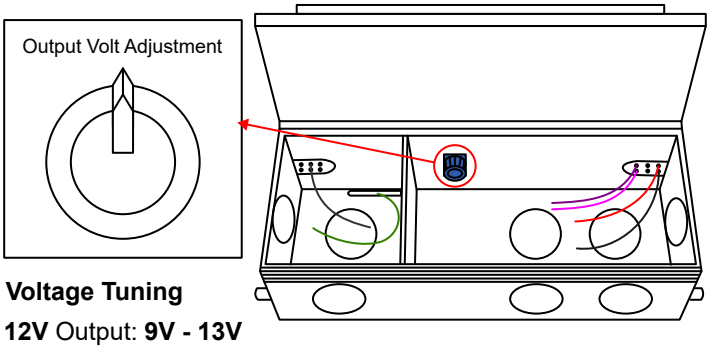

Voltage Tuning

12V Output: **9V - 13V**
24V Output: **17V - 25V**
48V Output: **36V - 49V**

Wire Spec

12V: 18AWG Input, 14AWG Output
24V: 18AWG Input, 14 AWG Output
48V: 18AWG Input, 18 AWG Output

Wiring Using Triac / MLV

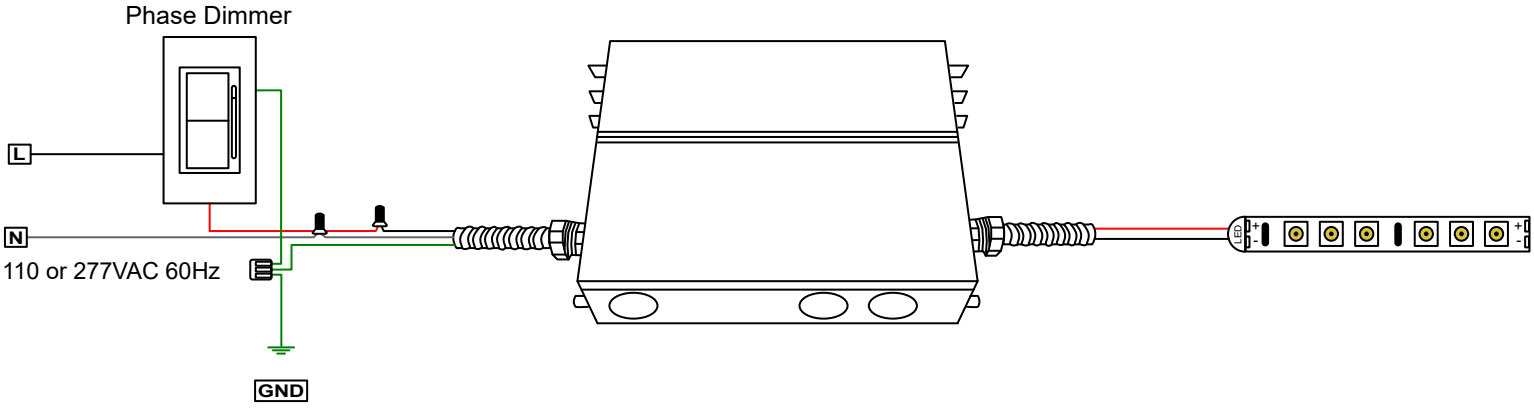

Wiring Using Triac / ELV

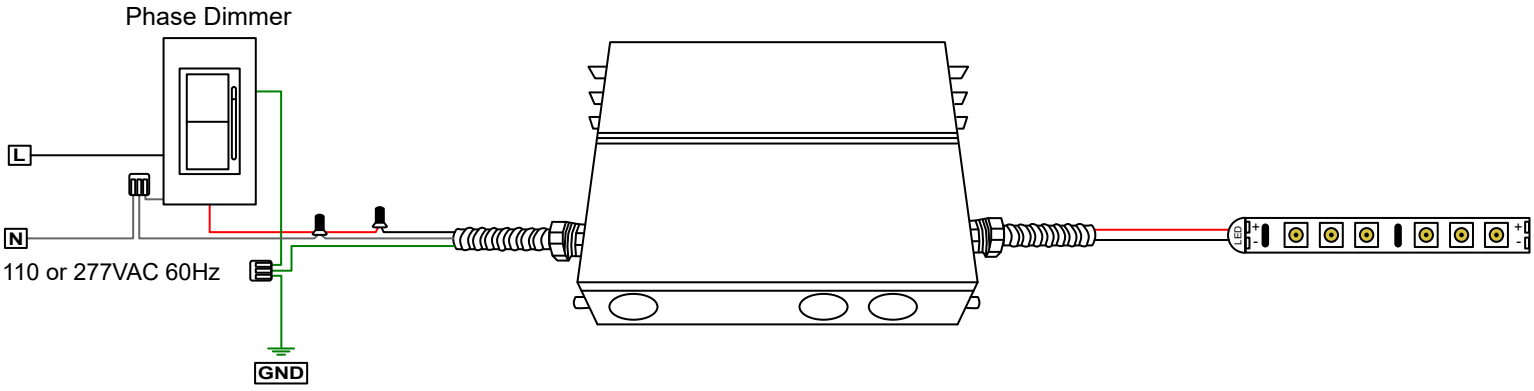

Wiring Using 0-10/1-10V Dimming (Independent Driver)

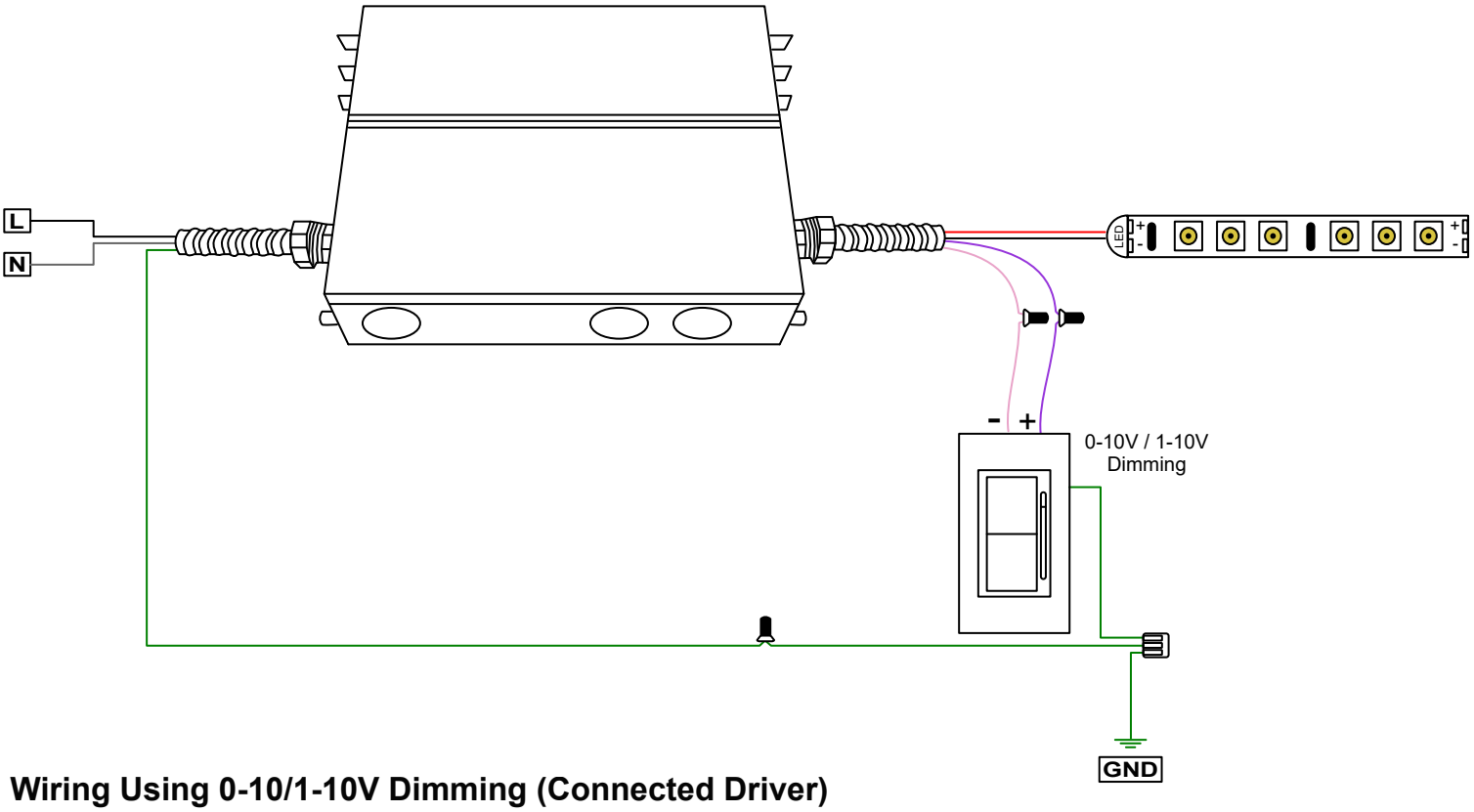

Wiring Using 0-10/1-10V Dimming (Connected Driver)

